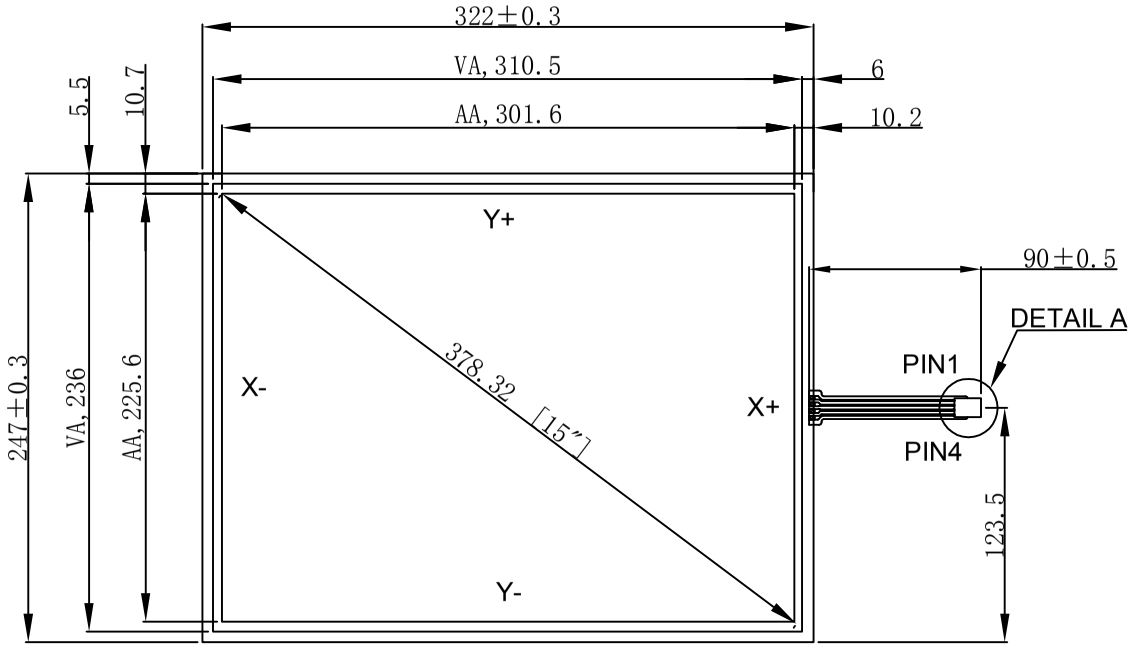

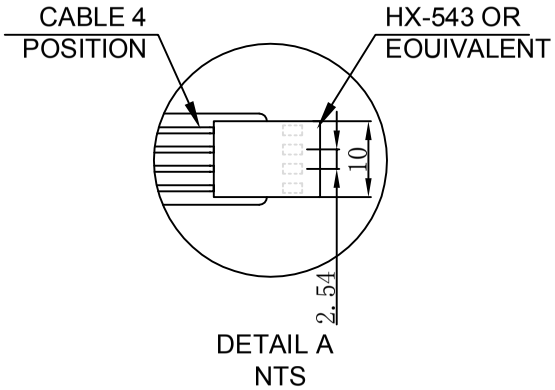

Notes:

1.Type:Film to Film
2.Operating Voltage:≤10v
3.Operation Temperature:-20℃～65℃
Storage Temperature:-30℃～70℃
4.Life Time:1.000.000 times
5.Connect Material:FPC
6.Response Time:≤10ms
7.Linearity:≤1.5%
8.Transmittance:≥75%
9.Surface Hardness≥3H(pencil)
10.Operation force:60g～150g
11.Resistance:X:360Ω-880Ω Y:200Ω-500Ω

Logic：

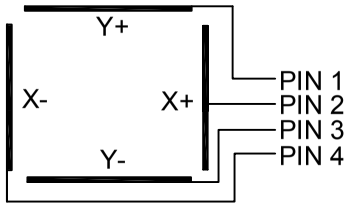

TOLERANCES (UNLESS OTHERWISE STATED)	
DECIMALS	ANGLES ±0.5%
>2000MM	±2.00MM
1600< X ≤2000M	±1.20MM
1200< X ≤1600MM	±0.80MM
800< X ≤1200MM	±0.50MM
400< X ≤800MM	±0.40MM
120< X ≤400MM	±0.30MM
30< X ≤120MM	±0.20MM
<30MM	±0.10MM

GreenTouch

GreenTouch Technology Co.,Ltd

Model No.:	GT-4W-15A-F	Size	15"	Ratio	4:3
Structure	F+F	Unit	mm	Scale	1:1
Design	李俊	Date	2020.02.25	Page	1/1
Check	付作韦	Date	2020.02.25	Version	A0
Release	汪陈	Date	2020.02.25		